THIS DRAWING IS UNPUBLISHED. RELEASED FOR PUBLICATION 20
© COPYRIGHT 20 BY - ALL RIGHTS RESERVED.

REVISIONS

P	LTR	DESCRIPTION	DATE	DWN	APVD
	A	INITIAL RELEASE	19DEC2016	N.P	X.X

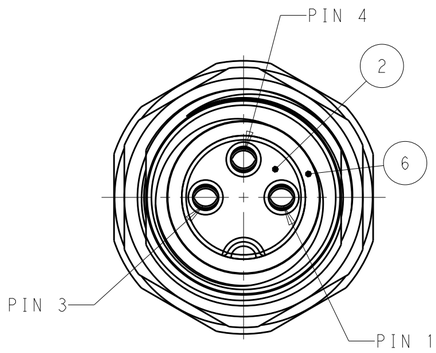

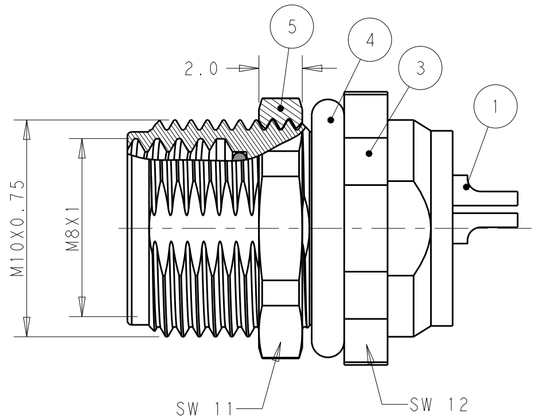

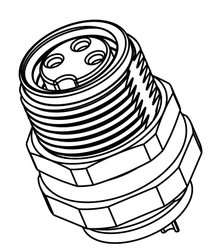

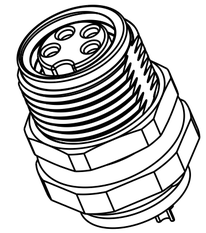

NOTES:

1. TECHNICAL DATA: SEE TABLE 1
2. CONTACT SOLIDER CUP.
3. THE WIRE COLOR FOR SOLIDERING: PIN 1 BROWN; PIN 2 WHITE; PIN 3 BLUE; PIN 4 BLACK;
4. ALL PRODUCT MUST COMPLIANCE WITH ROHS AND REACH.

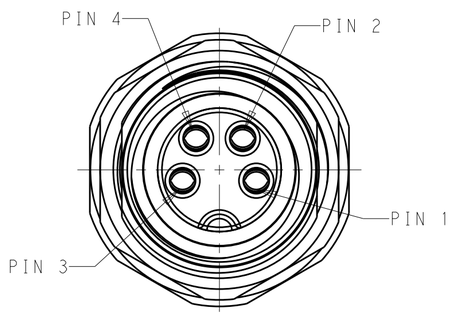

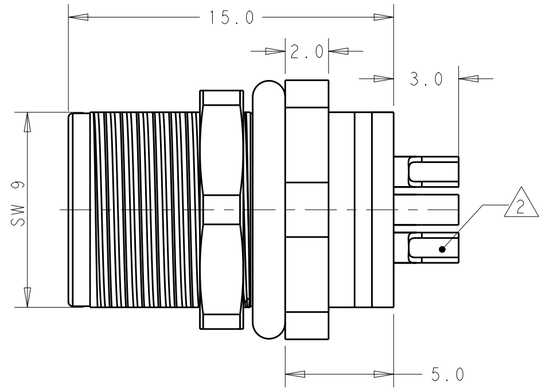

注意事项

1. 技术参数：见表1
2. 端子焊杯；
3. 焊接线的颜色：PIN 1棕色，PIN 2 白色，PIN 3蓝色，PIN 4 黑色；
4. 产品必须符合ROHS与REACH.

TABLE 1

TECHNICAL DATA	T4031017031-000	T4031017041-000
RATED IMPULSE VOLTAGE	1500V	800V
RATED VOLTAGE	60V	30V
RATED CURRENT	3A	
OVERVOLTAGE CATEGORY	II	
MATERIAL GROUP	II	
DEGREE OF PROTECTION	IP67	
TEMPERATURE	-40°C~85°C	

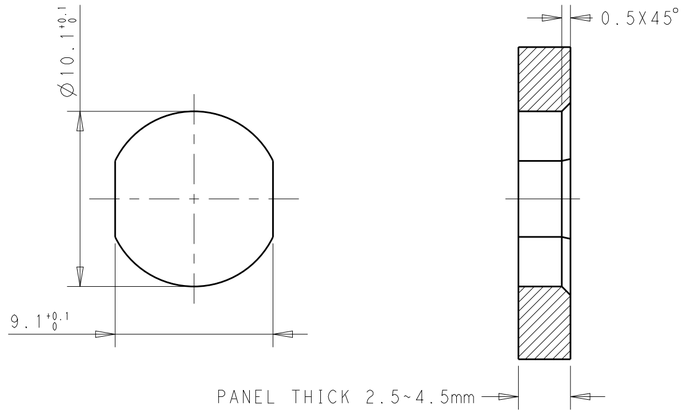

RECOMMENDED PANEL SIZE

MATERIAL	DESCRIPITON	ITEM
RUBBER	O-RING	6
COPPER ALLOY	NUT	5
RUBBER	O-RING	4
COPPER ALLOY	BODY NUT	3
PA66	HOUSING	2
COPPER ALLOY	CONTACT	1

TYPE	POS.	PART NUMBER
RPC-M8-FF-4CON-M10-LAU	4	T4031017041-000
RPC-M8-FF-3CON-M10-LAU	3	T4031017031-000

THIS DRAWING IS A CONTROLLED DOCUMENT.

DIMENSIONS: mm

TOLERANCES UNLESS OTHERWISE SPECIFIED:
0 PLC ±-
1 PLC ±0.25
2 PLC ±0.15
3 PLC ±0.10
4 PLC ±
ANGLES ±-

MATERIAL: TBD material_2

FINISH: - finish_spec_2

DWN 28NOV2016 Nick Pan
CHK 28NOV2016 Kobby Zhao
APVD 28NOV2016 Xiang Xu

PRODUCT SPEC: 108-106140
APPLICATION SPEC: 114-137144-1
WEIGHT: -

CUSTOMER DRAWING

TE Connectivity

NAME: M8 PANEL CONNECTOR SOLDERING WIRE FEMALE SIDE, UNSHIELDED, REAR MOUNTING

SIZE	CAGE CODE	DRAWING NO	RESTRICTED TO
A2	-	C-T40310170X1000	-

SCALE 5:1 SHEET 1 OF 1 REV A

1471-9 (3/13)