THIS DRAWING IS UNPUBLISHED. RELEASED FOR PUBLICATION 20
© COPYRIGHT 20 BY - ALL RIGHTS RESERVED.

REVISIONS

| P | LTR | DESCRIPTION | DATE | DWN | APVD |
|---|---|---|---|---|---|
| | A | INITIAL RELEASE | 19DEC2016 | N.P | X.X |
| | | | | | |
| | | | | | |
| | | | | | |

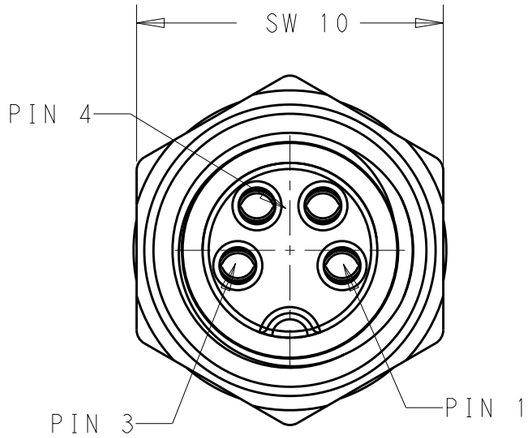


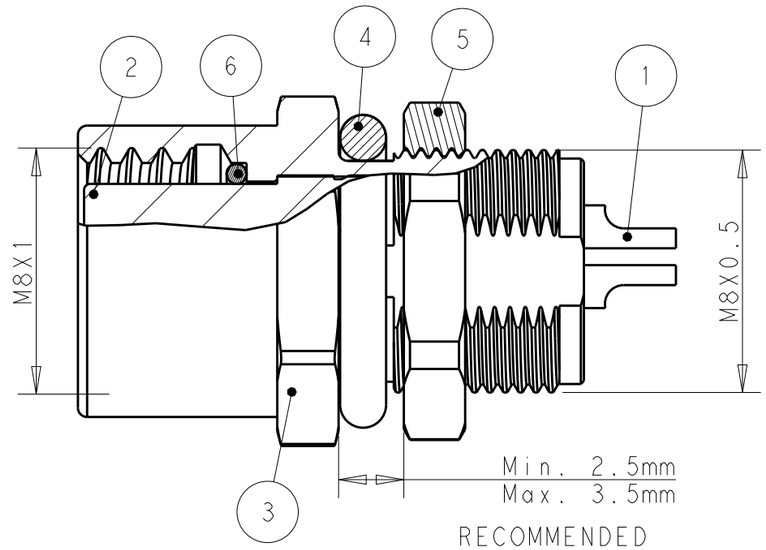


RECOMMENDED PANEL THCIKNESS

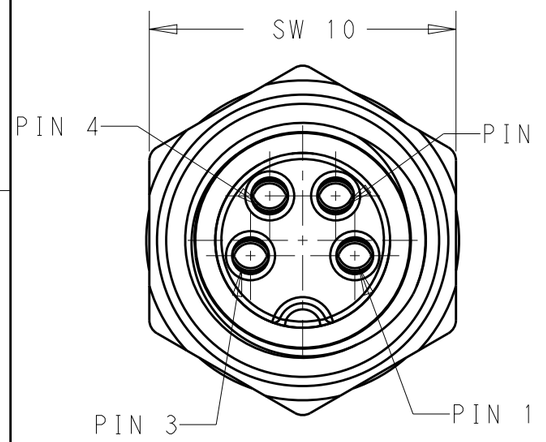


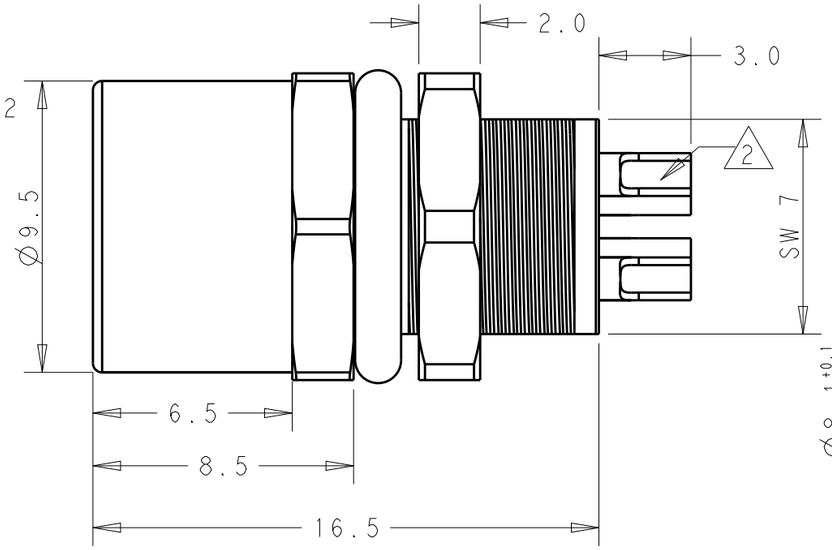


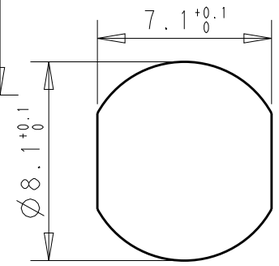


PANEL MOUNTING HOLE

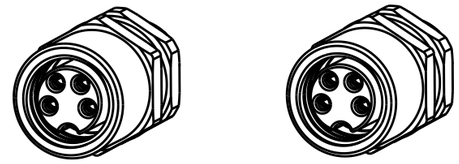

NOTES:

1. TECHNICAL DATA: SEE TABLE 1
2. CONTACT SOLIDER CUP;
3. THE WIRE COLOR FOR SOLIDERING: PIN 1 BROWN; PIN 2 WHITE; PIN 3 BLUE; PIN 4 BLACK;
4. ALL PRODUCT MUST COMPLIANCE WITH ROHS AND REACH.

注意事项

1. 技术参数：见表1
2. 端子焊杯；
3. 焊接线的颜色：PIN 1棕色，PIN 2 白色，PIN 3蓝色，PIN 4 黑色；
4. 产品必须符合ROHS与REACH.

TABLE 1

| TECHNICAL DATA | T4033014031-000 | T4033014041-000 |
|---|---|---|
| RATED IMPULSE VOLTAGE | 1500V | 800V |
| RATED VOLTAGE | 60V | 30V |
| RATED CURRENT | 3A | |
| POLLETION DEGREE | 3 | |
| OVERVOLTAGE CATEGORY | II | |
| MATERIAL GROUP | II | |
| DEGREE OF PROTECTION | IP67 | |
| TEMPERATURE | -40°C~85°C | |

| MATERIAL | DESCRIPITON | ITEM |
|---|---|---|
| RUBBER | INNER O-RING | 6 |
| COPPER ALLOY | NUT | 5 |
| RUBBER | O-RING | 4 |
| COPPER ALLOY | BODY NUT | 3 |
| PA66 | HOUSING | 2 |
| COPPER ALLOY | CONTACT | 1 |

| TYPE | POS. | PART NUMBER |
|---|---|---|
| RPC-M8-FB-4CON-M8-LAU | 4 | T4033014041-000 |
| RPC-M8-FB-3CON-M8-LAU | 3 | T4033014031-000 |

THIS DRAWING IS A CONTROLLED DOCUMENT.

DIMENSIONS: mm

TOLERANCES UNLESS OTHERWISE SPECIFIED:
0 PLC ±-
1 PLC ±0.25
2 PLC ±0.15
3 PLC ±
4 PLC ±
ANGLES ±-

MATERIAL: TBD material_2
FINISH: - finish_spec_2

DWN 02AUG2016 Nick Pan
CHK 02AUG2016 Kobby Zhao
APVD 02AUG2016 Xiang Xu
PRODUCT SPEC 108-106140
APPLICATION SPEC 114-137144-1
WEIGHT -

TE Connectivity

NAME: M8 PANEL CONNECTOR FEMALE SIDE SOLDER TYPE, FRONT MOUNTING
-

| SIZE | CAGE CODE | DRAWING NO | RESTRICTED TO |
|---|---|---|---|
| A3 | - | C-T40330140X1000 | - |

CUSTOMER DRAWING | SCALE 5:1 | SHEET 1 OF 1 | REV A

1470-19 (3/13)