Rating	16A 125VAC,10A 250VAC
Contact Resistant	50m ohm Max.
Insulation Resistant	DC 500V 100M ohm Min.
Dielectric Strength	AC 1500V 1 minute
Operation Temperature	−20°C~85°C
Circuit	3P SPST ON−OFF (LED)

Mounting Hole

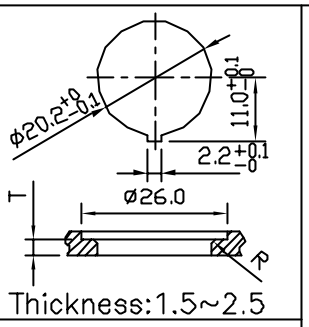

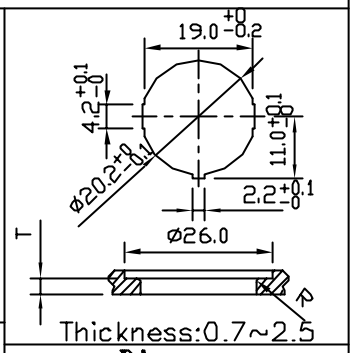

*MATERIAL:
Frame: Nylon 66, Black
Actuator: PC, Yellow
Waterproof: IP65
Printed: White, hot stamping

Diagram

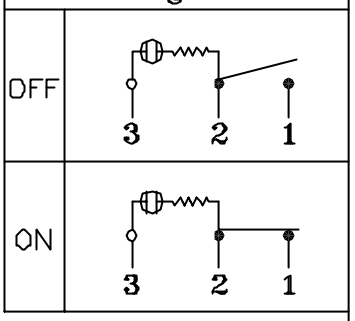

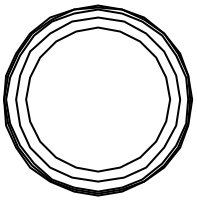

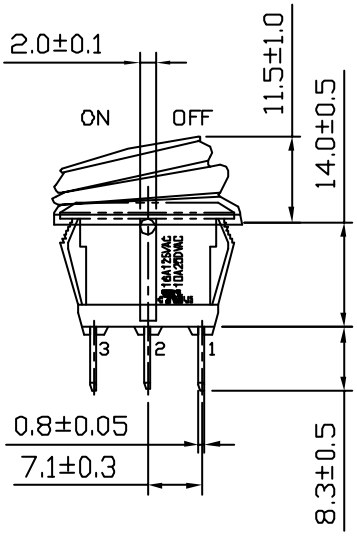

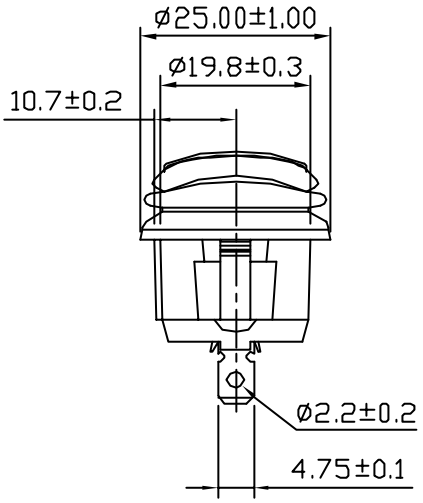

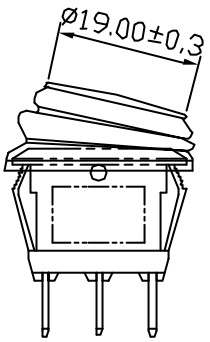

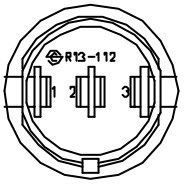

C8\R13\R13-112B8W-02-BYNN(1823849)

Date	Name	Descriptions	NO
			△
			△

Drawing	Check	Approval	SCI No.	1823849	Model Name	ROCKER SWITCH
曹盈芳	王佰山	李景煌	Customer No.		Model No.	R13-112B8W-02-BYNN-0A-N2
03/07/'07	03/07/'07	03/07/'07	Unit	mm	SHIN CHIN INDUSTRIAL CO., LTD.	