Rating	20A 14VDC
Contact Resistance	50m ohm Max.
Insulation Resistance	DC 500V 100M ohm Min.
Dielectric Strength	AC 1500V 1 minute
Operation Temperature	-25°C~85°C
Switch Function	**3P SPST ON-OFF (LED dependent)**

Mounting Hole

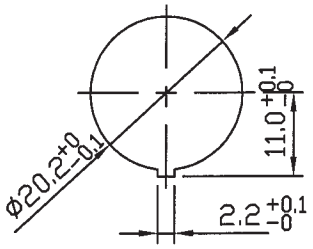

Thickness:2.0~3.0

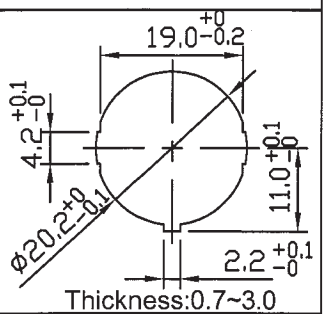

Thickness:0.7~3.0

Circuit Diagram

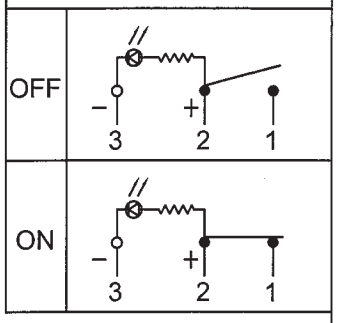

*MATERIAL:
Frame: Black, Nylon#66
Actuator: Black, Nylon#66
Lens: Green clear, PC
Printed: None

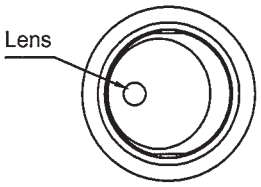

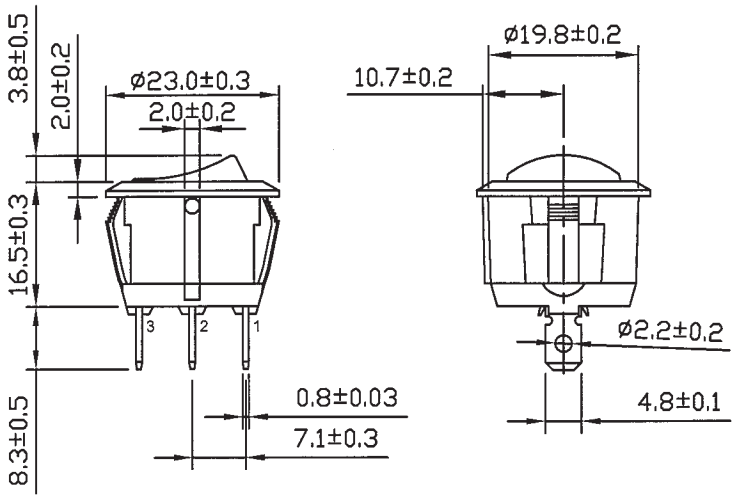

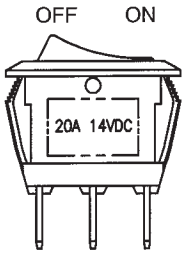

原稿
2014.12.10
研發部

C8\R13\R13-112B2-02(1821527)

							△
							△
Date	Name	Description					NO
Drawn	Checked	Approved	SCI BOM NO.	1821527	Model Name	ROCKER SWITCH	
曹盈芳		王伯山	Customer No.		Model No.	R13-112B2-02	Rev. 0
04/15/'14		4/15/'14	Unit	mm	Shin Chin Industrial Co., Ltd.		