Voltage (Max.)	32 VDC.	Mounting Holes	Blade Fuse Dim.
Input Terminial Rating	#10-32 threaded studs (100A max.)	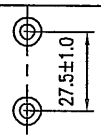	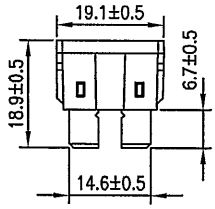
Output Terminial Rating	30A max. per circuit.		
Connection Pad Option Available	Input wire size : #4-6 AWG.		
	Output wire size : #12-16 AWG.	Terminal Dim.	
Fuse Specifications	For Blade Fuses Used Only	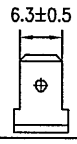	
Torque Rating	20 in-lb (2.25Nm) max.		
Mounting Torque Rating	8 in-lb (0.9Nm) max.		
Temperature Rating	-20 ℃ to 85 ℃	Circuit Diagram	

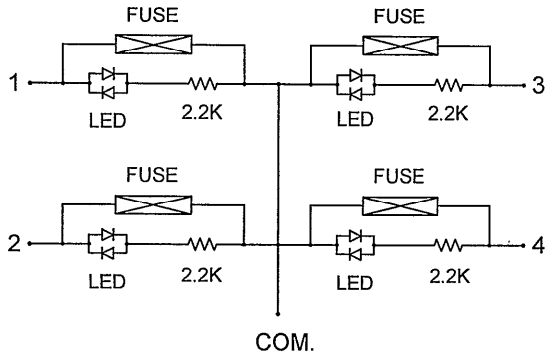

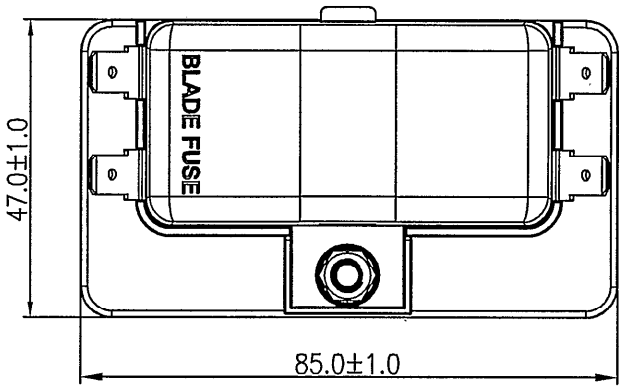

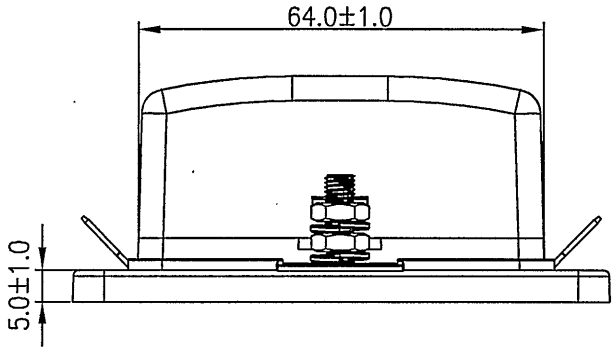

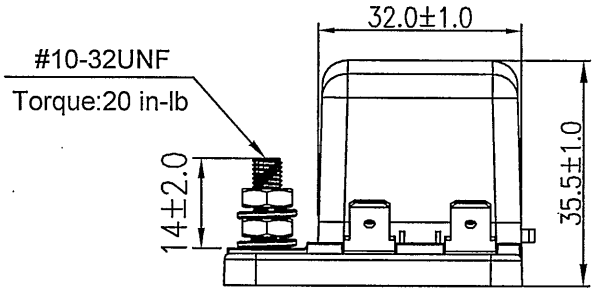

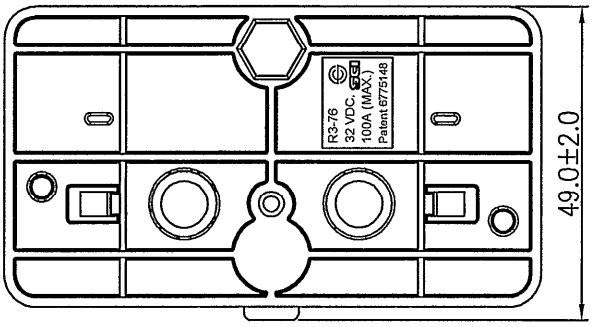

R3-76

Material :
Cover : PC. (Transparent)
Housing , Base : PBT. (Black)
Push Button : POM. (White)
Terminal : Tin. plating Copper

Notes :
Rating 100A max. tested by
4 pcs. 25A load.

*新結構

							△
							△
Date	Name	Description					No.
Drawn	Checked	Approved	SCI BOM No.	1310662	Model Name	BLADE FUSE BOX (4P)	
柳新強	柳新強	Simon	Customer No.		Model No.	R3-76-01-3L104	Rev.
03/17/'17	5/2-'17	5/2-'17	Unit	mm	Shin Chin Industrial Co., Ltd.		0