Voltage (Max.)	32 VDC.
Input Terminial Rating	#10-32 threaded studs (100A max.)
Output Terminial Rating	30A max. per circuit.
Connection Pad Option Available	Input wire size : #4-6 AWG.
	Output wire size : #12-16 AWG.
Fuse Specifications	For Blade Fuses Used Only
Torque Rating	20 in-lb (2.25Nm) max.
Mounting Torque Rating	8 in-lb (0.9Nm) max.
Temperature Rating	-20 ℃ to 85 ℃

Mounting Holes

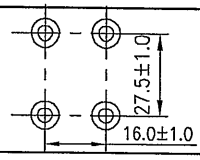

Blade Fuse Dim.

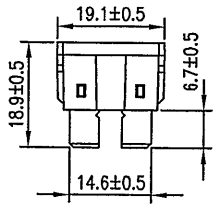

Terminal Dim.

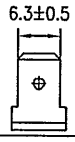

Circuit Diagram

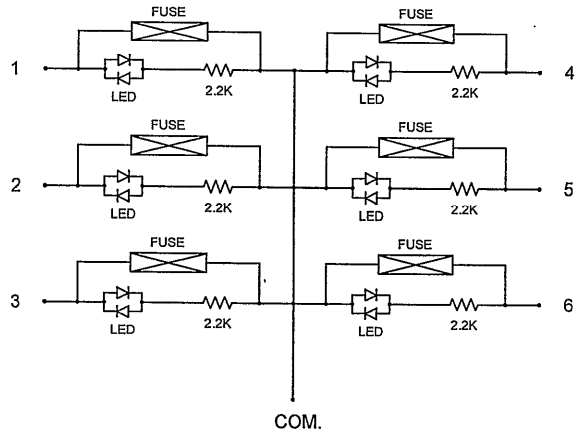

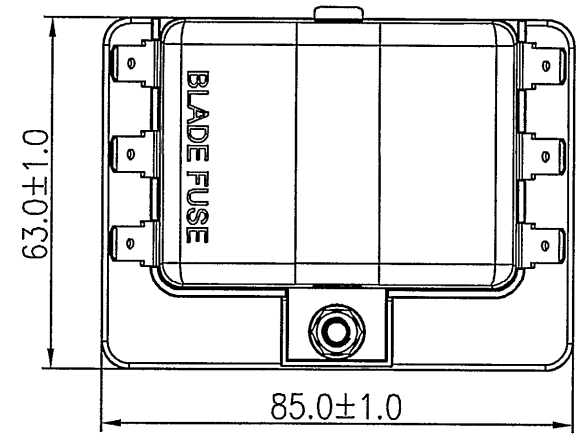

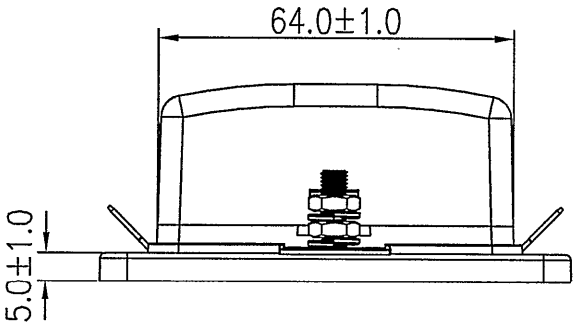

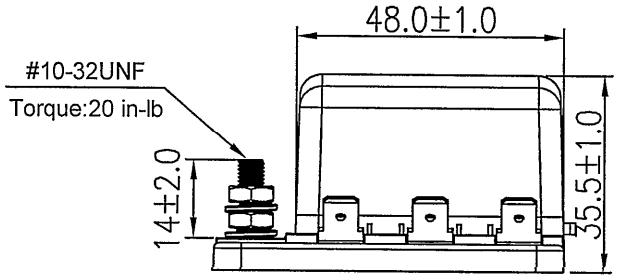

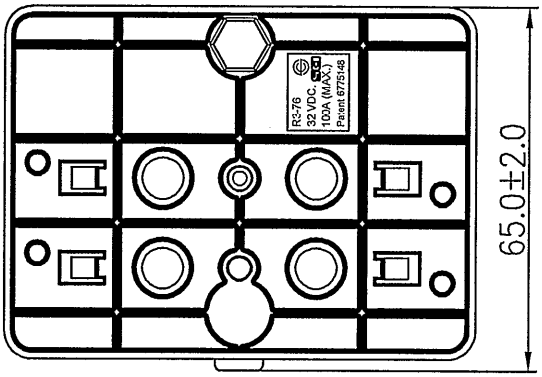

R3-76

Material :
Cover : PC. (Transparent)
Housing , Base : PBT. (Black)
Push Button : POM. (White)
Terminal : Tin. plating Copper

Notes :
1. Rating 100A max. tested by 4 pcs. 25A. load.

*新結構

							△
							△
Date	Name	Description					No.
Drawn	Checked	Approved	SCI BOM No.	1310663	Model Name	BLADE FUSE BOX (6P)	
柳新強	柳新強	Simon	Customer No.		Model No.	R3-76-01-3L106	Rev.
03/17/'17	5/2-17	5/2-17	Unit	mm	Shin Chin Industrial Co., Ltd.		0